Ubiquitin Proteasome Pathway

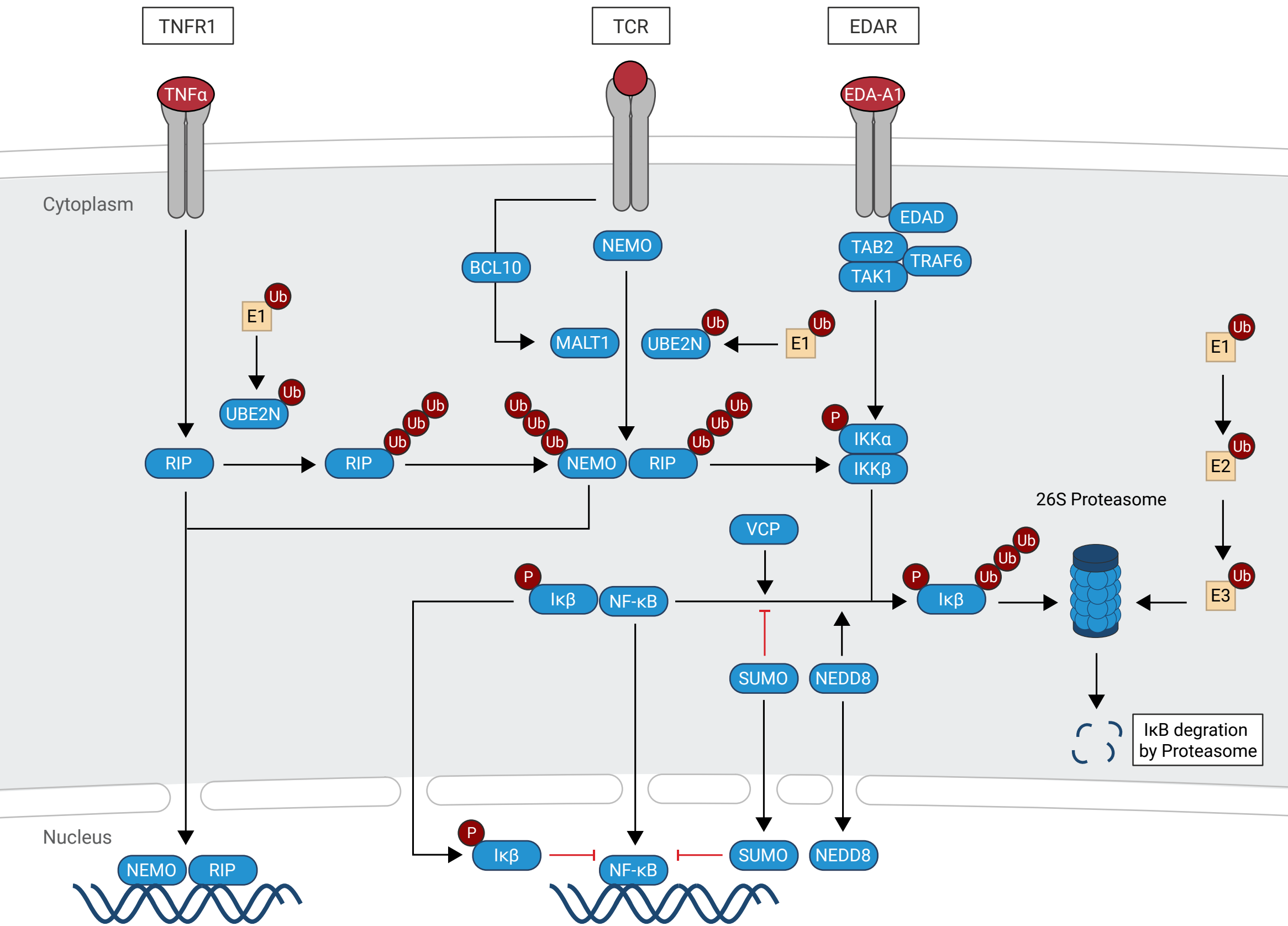

©2025 antibodies-online Inc.